DOC00005 A

SMITH FLOW CONTROL Ltd
GEARBOX FILL-IN SHEET

6 Waterside Business Park
Eastways Industrial Estate
Witham
Essex, CM8 3YQ
Tel: +44(0)1376 517901
Fax: +44(0)1376 518720

SITE:-

JOB No

PLEASE INDICATE WHERE ACTUAL VALVE DIFFERS FROM THIS DRAWING.

A =.....
ØB=.....
C =.....
D =.....
ØE=.....
F =.....
G =.....
ØI=.....
M =.....
N =.....
P =.....
Q =.....
R =.....
S =.....
'T'=.....

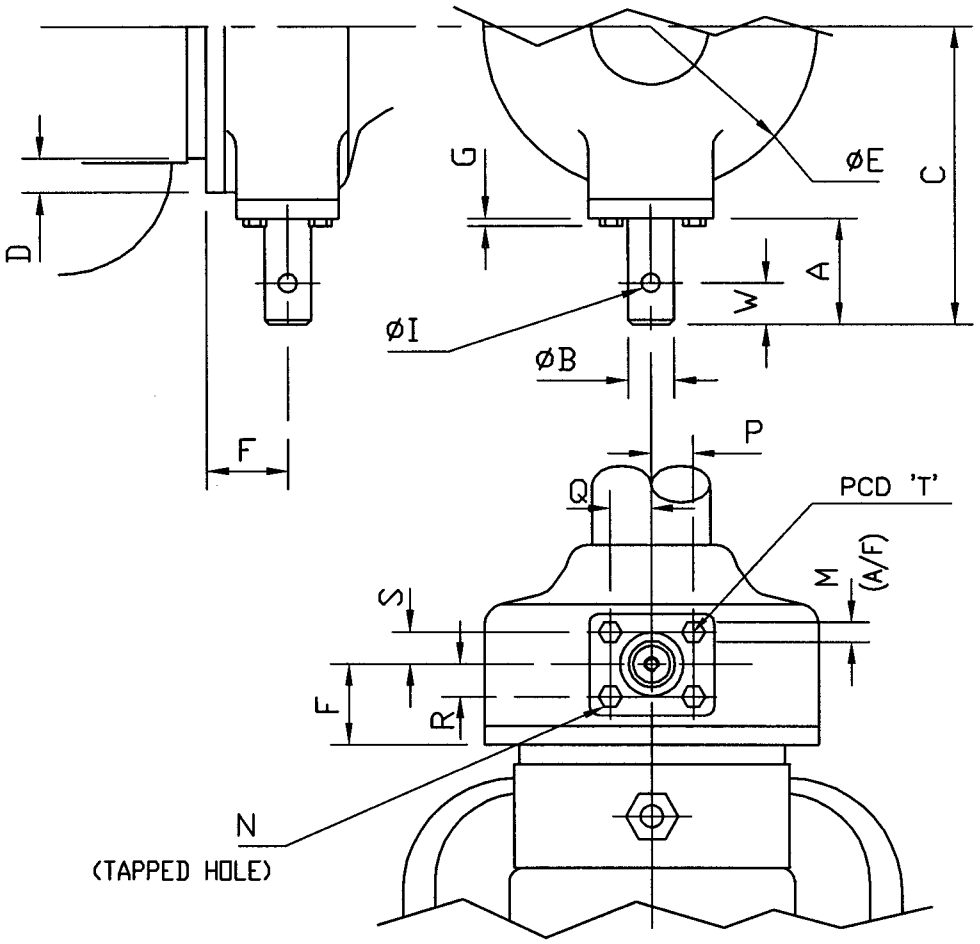

DATE	
DRN	
MAKE	
VALVE TYPE	
G/BOX MODEL	
BORE	
RATING	
H/W DIA.	
No. TURNS	
TAG No.	

HANDWHEEL STEM FORM:- PLEASE FILL IN APPROPRIATE DIMENSIONS

W =.....
X =.....
Y =.....
Z =.....
ØAA=.....
A1=.....
ØB1=.....

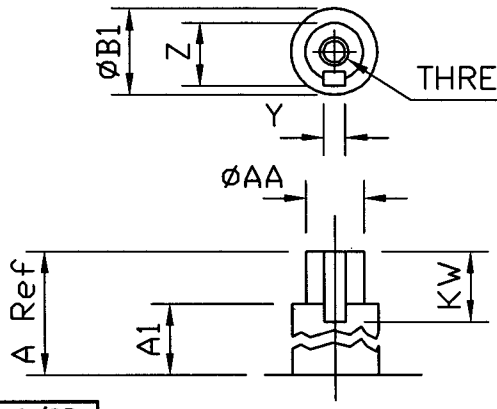

THREAD (X): SIZE=_____
PITCH=_____
DEPTH=_____

SHOULDER &/OR KEYWAY FORM

NOTES:-

KW=.....

DRAWING No